Current part is item (17) on diagram. Available at www.oshkoshequipment.com

UNIT, DIRECT SUPPORT, AND GENERAL SUPPORT MAINTENANCE
REPAIR PARTS AND SPECIAL TOOLS LIST

EXTENDED SERVICE PROGRAM (ESP)
TRUCK, CARGO, 2-1/2-TON, 6X6, M44A3 SERIES TRUCKS (DIESEL)

M35A3, W/O WINCH (NSN 2320-01-383-2047); W/WINCH (NSN 2320-01-383-3850);
M35A3C, W/O WINCH (NSN 2320-01-383-2050); W/WINCH (NSN 2320-01-383-2049);
M36A3, W/O WINCH (NSN 2320-01-383-2048); W/WINCH (NSN 2320-01-383-2046).

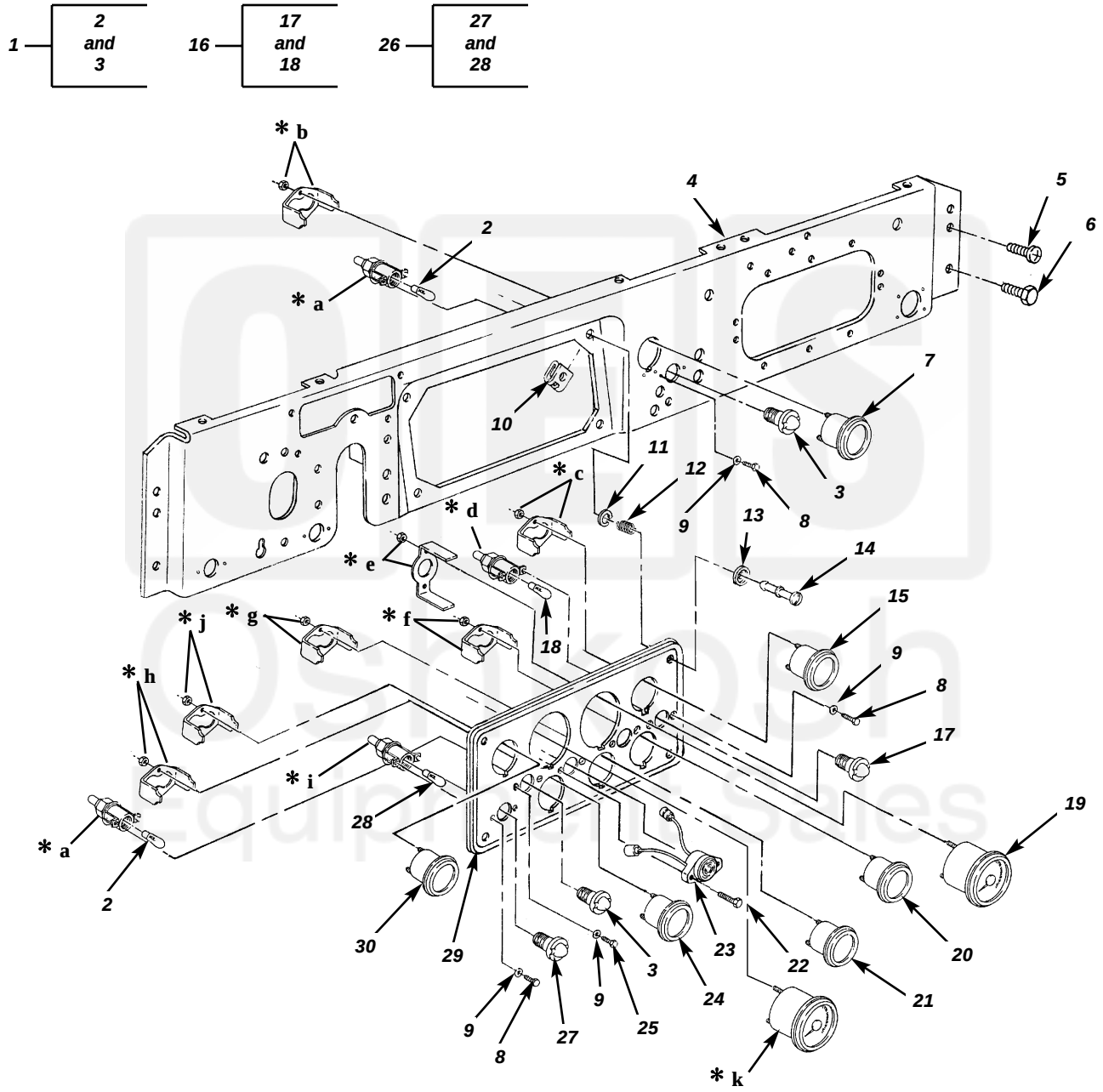

* **a** PART OF ITEM 1
* **b** PART OF ITEM 7
* **c** PART OF ITEM 15
* **d** PART OF ITEM 16
* **e** PART OF ITEM 19
* **f** PART OF ITEM 20
* **g** PART OF ITEM 21
* **h** PART OF ITEM 24
* **i** PART OF ITEM 26
* **j** PART OF ITEM 30
* **k** SEE FIGURE 178 FOR SPEEDOMETER

Figure 55. Instrument Panel and Related Parts.

Current part is item (17) on diagram. Available at www.oshkoshequipment.com

Current part is item (17) on diagram. Available at www.oshkoshequipment.com

(1) ITEM NO	(2) SMR CODE	(3) NSN	(4) CAGEC	(5) PART NUMBER	(6) DESCRIPTION AND USABLE ON CODES(UOC)	(7) QTY
					GROUP 0607 INSTRUMENT OR ENGINE CONTROL PANEL	
					FIG. 55 INSTRUMENT PANEL AND RELATED PARTS	
1	PAOOO	6210006999458	19207	8376500	LIGHT,INDICATOR.....	2
2	PAOZZ	6240001558714	96906	MS25231-313	.LAMP,INCANDESCENT.....	1
3	PAOZZ	6220012830384	19207	12360875-2	.LENS,LIGHT.....	1
4	PAOZZ	2510014138873	34623	RCSK14769-1	PANEL,VEHICULAR OPE.....	1
5	PAOZZ	5305001441514	19207	8743917	SCREW,MACHINE.....	4
6	PAOZZ	5306014075400	24617	425851	BOLT,MACHINE.....	1
7	PAOZZ	6685010985110	19207	11669355	GAGE,PRESSURE,DIAL TRANS OIL TEMP..	1
8	PAOZZ	5305014075389	24617	159582	SCREW,MACHINE.....	10
9	PAOZZ	5310005590070	96906	MS35333-38	WASHER,LOCK.....	8
10	PAOZZ	5325009983351	94222	85-47-101-15	RECEPTACLE,TURNLOCK.....	4
11	PAOZZ	5310000526362	94222	85-46-101-41	WASHER,RECESSED.....	4
12	PAOZZ	5360004103130	94222	14-18-150-24	SPRING,HELICAL,COMP.....	4
13	PAOZZ	5310011029221	94222	85-34-201-20	RETAINER.....	4
14	PAOZZ	5325011070085	94222	85-11-220-16	STUD,TURNLOCK FASTE.....	4
15	PAOZZ	6685009362139	96906	MS24543-2	METER,SPECIAL SCALE WATER TEMP.....	1
16	PAOOO	6210006355686	19207	7971111	LIGHT,INDICATOR.....	1
17	PAOZZ	6210005480504	19207	7358672	.LENS,LIGHT.....	1
18	PAOZZ	5980012856688	19207	12360890-1	.LIGHT EMITTING DIOD.....	1
19	PAOZZ	6680014154025	19207	12448944	TACHOMETER,ELECTRIC.....	1
20	PAOZZ	6685011095695	19207	12276938	GAGE,PRESSURE,DIAL AIR.....	1
21	PAOZZ	6625010869580	96906	MS24532-2 REVG	METER,SPECIAL SCALE VOLTS.....	1
22	PAOZZ	5305011389540	96906	MS51863-33	SCREW,TAPPING.....	2
23	PAOZZ	5980011870791	19207	12356703-1	LIGHT EMITTING DIOD.....	1
24	PAOZZ	6680009333600	96906	MS24544-2	INDICATOR,LIQUID QU FUEL.....	1
25	PAOZZ	5305009846189	96906	MS35206-241	SCREW,MACHINE.....	2
26	PAOOO	6210006999457	19207	8376499	LIGHT,INDICATOR.....	1
27	PAOZZ	6210002995564	19207	7358622	.LENS,LIGHT.....	1
28	PAOZZ	6240001558714	96906	MS25231-313	.LAMP,INCANDESCENT.....	1
29	PAOZZ	2510014077531	19207	12448664	PANEL,VEHICULAR OPE.....	1
30	PAOZZ	6620001159042	96906	MS24540-2	INDICATOR,PRESSURE OIL.....	1

END OF FIGURE

Current part is item (17) on diagram. Available at www.oshkoshequipment.com